N-CHANNEL ENHANCEMENT MODE POWER MOSFET

MAIN CHARACTERISTICS

I_D	16A
V_{DSS}	650V
R_{DSON}-typ(@V_{GS}=10V)	0.45Ω

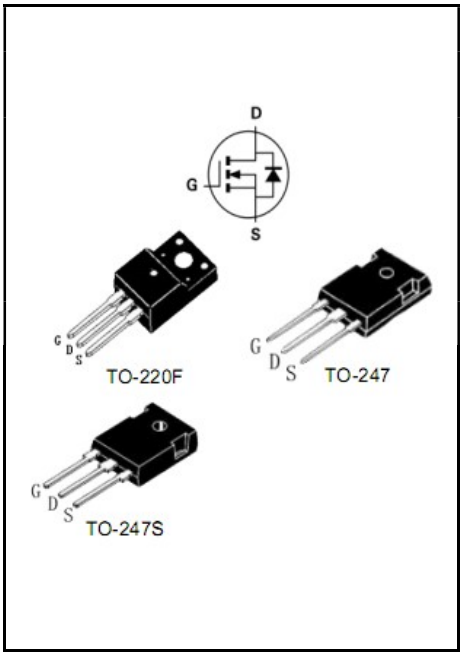

lead-free ROHS

FEATURES

- Fast Switching
- Low ON Resistance
- Low Gate Charge
- 100% Single Pulse avalanche energy Test
- LeadfreeincomplywithEURoHS2011/65/EUdirectives

MECHANICAL DATA

- Case: Molded plastic
- Mounting Position: Any
- Molded Plastic: UL Flammability Classification Rating 94V-0
- Solder bath temperature275℃maximum,10s per JESD22-106
- Case: TO-220F, TO-247,TO-247S

PRODUCT SPECIFICATION CLASSIFICATION

Part Number	Package	Marking	Pack
YFW16N65A8	TO-220F(1.3 mm)	16N65AF	50PCS/Tube
YFW16N65A6	TO-247	16N65AP	30PCS/Tube
YFW16N65A7	TO-247S	16N65APS	30PCS/Tube

Maximum Ratings at Tc=25°C unless otherwise specified

Characteristics	Symbols	Value		Units
		220F	247/247S	
Drain-Source Voltage	V_{DS}	650		V
Gate-Source Voltage	V_{GS}	±30		V
Continue Drain Current	I_D	16		A
-Continuous (TC = 100°C)		10		
Pulsed Drain Current (Note1)	I_{DM}	64		A
Power Dissipation	P_D	70	180	W
-Derate above 25°C		0.51	1.14	W/°C
Single Pulse Avalanche Energy (Note2)	E_{AS}	800		mJ
Avalanche Current (Note 1)	I_{AR}	16		A
Repetitive Avalanche Energy (Note 1)	E_{AS}	32		mJ
Operating Temperature Range	T_J	150		°C
Storage Temperature Range	T_{STG}	-55 to +150		°C
Thermal Resistance, Junction to Case	$R_{\theta JC}$	1.95	0.82	°C/W
Thermal Resistance, Junction to Ambient	$R_{\theta JA}$	100	62.5	°C/W

Maximum Ratings at Tc=25°C unless otherwise specified

Characteristics	Test Condition	Symbols	Min	Typ	Max	Units
Drain-Source Breakdown Voltage	V_{GS} = 0 V, I_D = 250 μA	BV_{DSS}	650	-	-	V
Breakdown Voltage Temperature Coefficient	ID=250μA (Referenced to 25°C)	△BVDSS /△TJ	-	0.65	-	V/°C
Drain-Source Leakage Current	V_{DS} = 650 V, V_{GS} = 0 V	I_{DSS}	-	-	1	uA
	V_{DS} = 520 V, T_c = 125°C		-	-	10	
Gate Leakage Current	V_{GS} = ± 30 V, VDS = 0 V	I_{GSS}	-	-	±100	nA
Gate-Source Threshold Voltage	V_{DS} = V_{GS} , I_D = 250 μA	$V_{GS(th)}$	2	-	4	V
Drain-Source On-State Resistance	V_{GS} = 10 V, I_D = 8A	$R_{DS(on)}$	-	0.45	0.55	Ω
Forward Transconductance	V_{DS} = 15 V, I_D = 8 A	gfs	-	15	-	S
Input Capacitance	V_{GS} = 0 V, V_{DS} = 25 V, f = 1MHz	C_{iss}	-	2250	-	pF
Output Capacitance		C_{oss}	-	208	-	
Reverse Transfer Capacitance		C_{rss}	-	17	-	
Turn-on Delay Time	I_D = 16, V_{DD} = 325V, R_G=10Ω(Note3,4)	td(ON)	-	30	-	nS
Rise Time		tr	-	70	-	
Turn-Off Delay Time		td(OFF)	-	145	-	
Fall Time		tf	-	74	-	
Total Gate Charge	I_D =16 A, V_{DD} = 520 V, V_{GS} = 10 V(Note3,4)	Q_G	-	71	-	nC
Gate to Source Charge		Q_{GS}	-	15	-	
Gate to Drain Charge		Q_{GD}	-	22	-	

Source-Drain Diode Characteristics at Ta=25°C unless otherwise specified

Characteristics	Test Condition	Symbols	Min	Typ	Max	Units
Maximun Body-Diode Continuous Current		I_S	-	-	16	A
Maximun Body-Diode Pulsed Current(Note2)		I_{SM}	-	-	64	A
Drain-Source Diode Forward Voltage	I_{SD} =16A	V_{SD}	-	-	1.5	V
Reverse Recovery Time	I_{SD} = 16A, V_{GS} = 0 V, dI_F / dt = 100 A/μs	trr	-	410	-	nS
Reverse Recovery Charge		Qrr	-	3.5	-	uC

Note:
1. Repetitive Rating: Pulse width limited by maximum junction temperature.
2. IAS = 16 A, VDD = 50 V, L =6mH, RG = 25Ω, starting TJ = 25°C.
3. ulse test: Pulse Width ≤300 μ s, Duty Cycle≤2%.
4. Essentially Independent of Operating Temperature

RATINGS AND CHARACTERISTIC CURVES

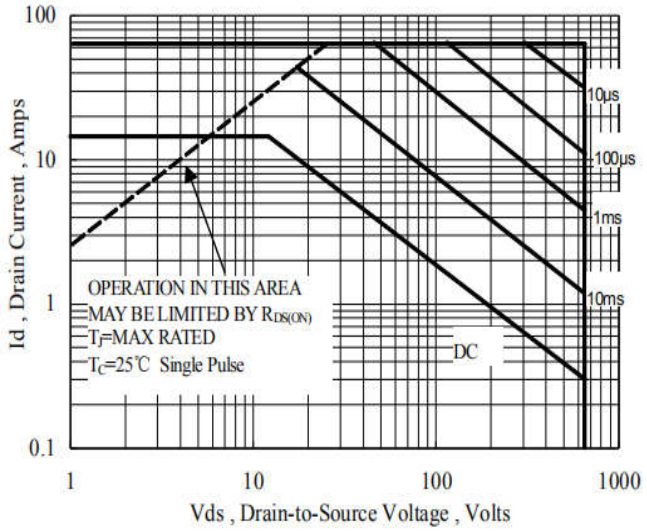

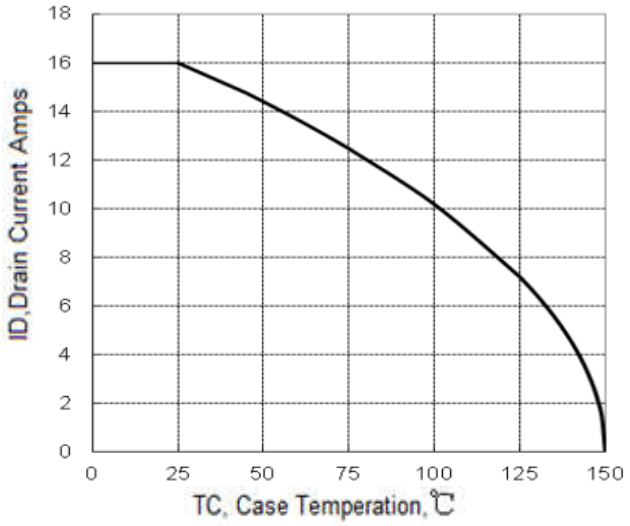

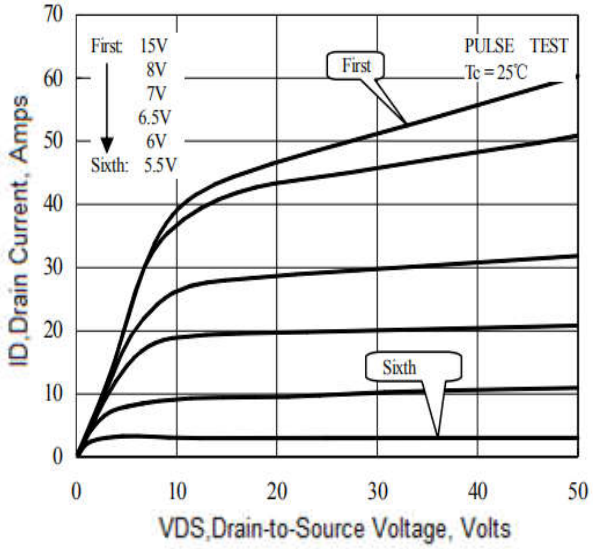

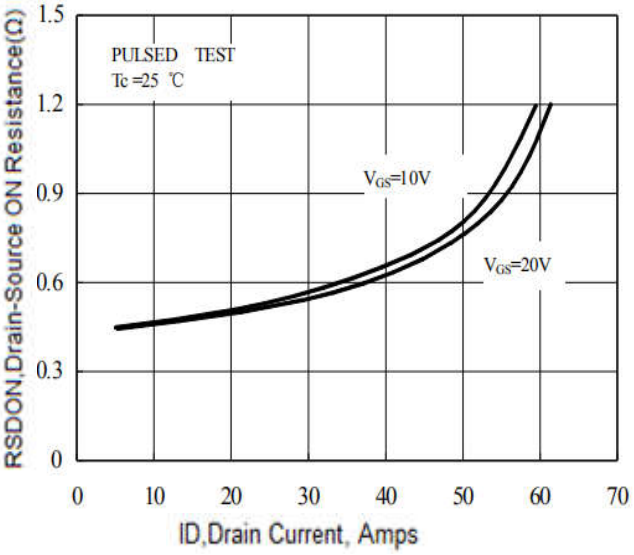

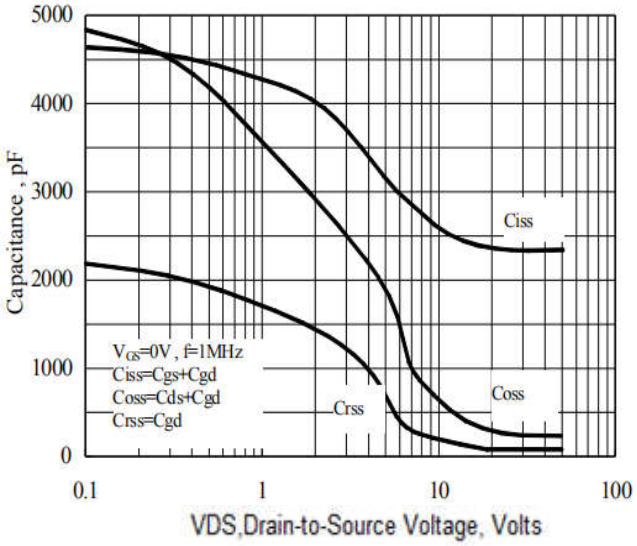

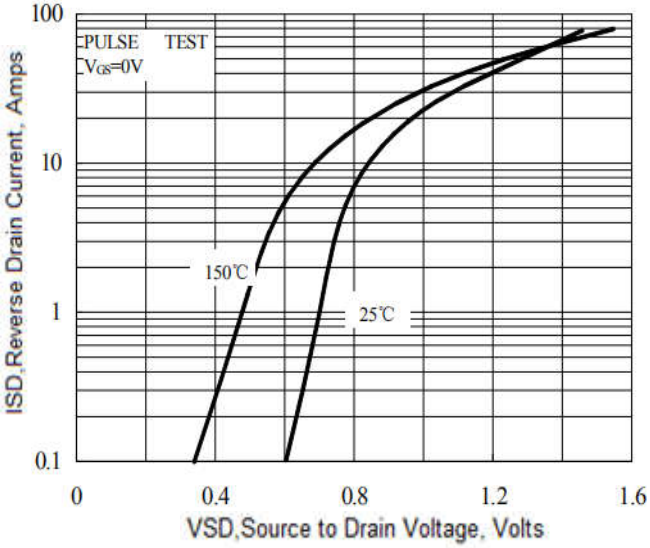

Package Outline Dimensions millimeters

TO-220F

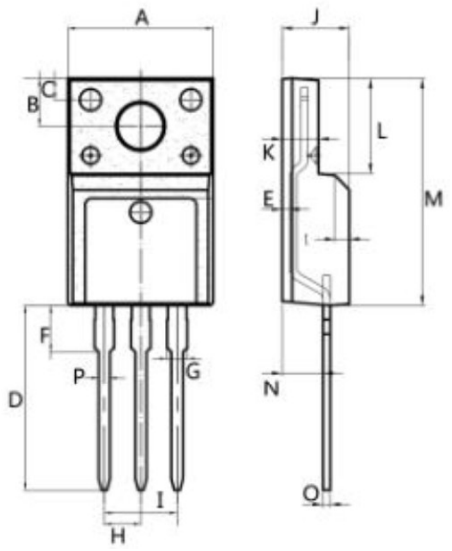

Dim.	Min.	Max.
A	9.95	10.25
B	2.95	3.25
C	1.25	1.45
D	12.95	13.25
E	0.50	0.65
F	3.1	3.3
G	1.30	1.45
H	Typ 2.54	
I	Typ 5.08	
J	4.60	4.75
K	2.50	2.65
L	6.35	6.55
M	15.4	16.0
N	2.75	3.05
O	0.48	0.52
P	0.76	0.84
All Dimensions in millimeter		

TO-247

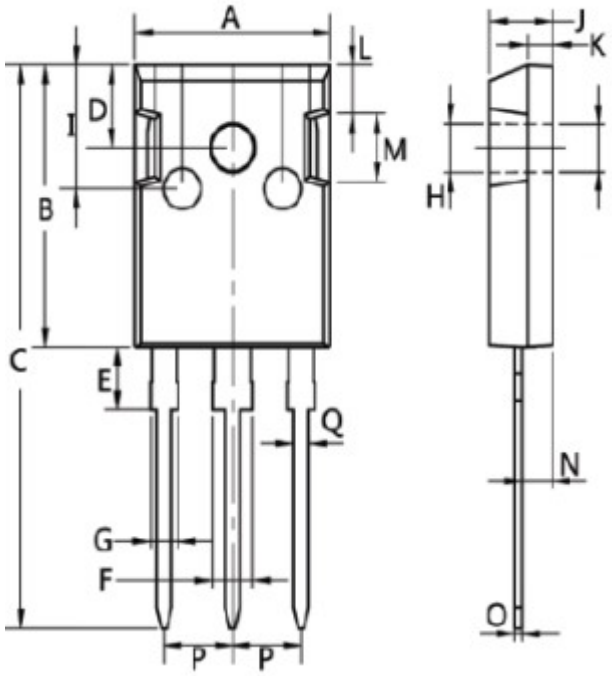

Dim.	Min.	Max.
A	15	16
B	20	21
C	41	42
D	5	6
E	4	5
F	2.5	3.5
G	1.75	2.5
H	3	3.5
I	8	10
J	4.9	5.1
K	1.9	2.1
L	3.5	4
M	4.75	5.25
N	2	3
O	0.55	0.75
P	Typ 5.08	
Q	1.2	1.3
All Dimensions in millimeter		

Package Outline Dimensions millimeters

TO-247S

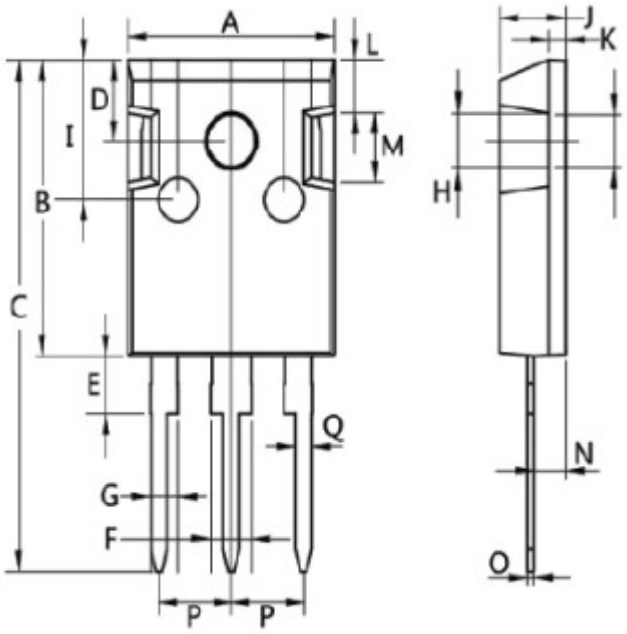

Dim.	Min.	Max.
A	15	16
B	19.5	20.5
C	33.5	35.5
D	5	6
E	3.5	4.5
F	2.5	3.5
G	1.75	2.5
H	3	4
I	9	11
J	4.9	5.1
K	1	1.3
L	3.75	4.25
M	4.75	5.25
N	1.8	2.2
O	0.45	0.6
P	Typ 5.08	
Q	1.2	1.3

All Dimensions in millimeter